DOORWAY FOAMER

SAFE FOODS™
CHEMICAL INNOVATIONS

1501 E 8TH ST ‣ NORTH LITTLE ROCK, AR 72114 ‣ 1-608-568-5841

DOORWAY FOAMER

SAFETY

As with any equipment of this type, when electricity and chemicals are involved, always ensure proper Personal Protective Equipment is worn **at all times** when operating. Electrical components, such as the power cord, should be kept away from water. Frequent inspection of the power cord and other electrical components for cuts, abrasions or other damage should be done on a regular basis. If any damage is present, the unit should not be operated until repaired by qualified personnel. The electrical enclosure should never be opened by an operator. The electrical enclosure should never be opened when the unit is plugged in.

TABLE OF CONTENTS

Description 1
Features 1
System Setup 2-3
Operation 4
Troubleshooting Guide 5
Wiring Diagram 6
Dimensions 7
Replaceable Parts 8-11

DESCRIPTION

Safe Foods Chemical Innovations **Doorway Foamer** system features easy to adjust timer controls that regulate both length of the foam cycle and the delay time between foam cycles. Additionally, they feature the ability to create foam with low-foaming chemicals and adjustable timer(s) to automatically repeat the foam cycle at a rate that meets your facility's traffic demands.

If extra sanitizing foam is needed between foam cycles, simply push and hold the manual override switch on the control box.

FEATURES

- Simple to install and operate
- Adjustable foam and delay cycles
- Completely made of stainless-steel
- Manual override switches
- Assortment of metering tips for precise chemical draw
- Designed for facilities with water pressure from 30-100psi
- Can create foam with low-foaming chemicals
- Dual chemical pick-ups for adding foam agents to non-foaming sanitizing agents (e.g., chlorine sanitizers)
- Activated by repeating timer
- Easily adjusted for maintaining the foam's presence in most traffic situations

SYSTEM SETUP

Check packaging for any damage	
Check to make sure all components are included (check replacement parts list)	
Mount unit on a suitable wall surface near the entryway (maximum distance less than 30 in.)	
Mount above chemical supply to prevent siphoning	
Install one nozzle for a single doorway or two nozzles for wider doors. When using nozzles, use equal length plumbing lengths to each nozzle to avoid pressure issues.	
Connect the discharge hose to the plumbing	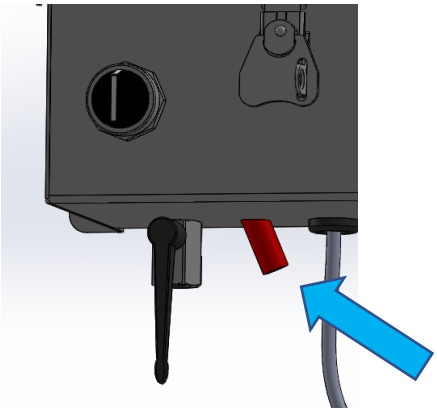
After backflow prevention requirements are met, connect the water line to the unit	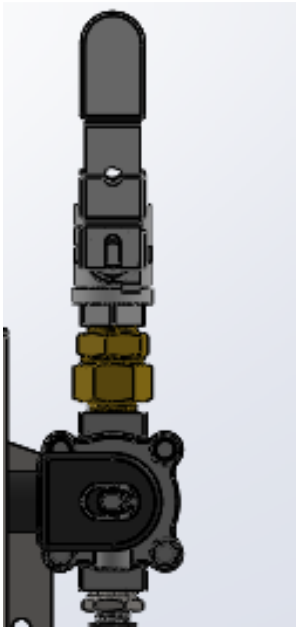

DO NOT TURN ON AT THIS TIME	
Connect the compressed dry air line	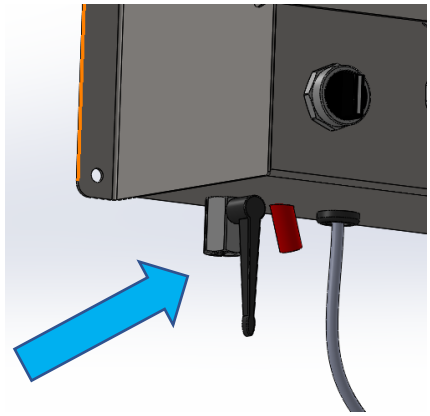
Select the starting metering tip	
See chemical label for dilution ratio or consult Safe Foods Chemical Innovations representative	
After metering tip installed, push the chemical supply tube over the check valve and immerse the chemical strainer into the chemical container. ▶ Also able to connect to a Central Foaming System if available	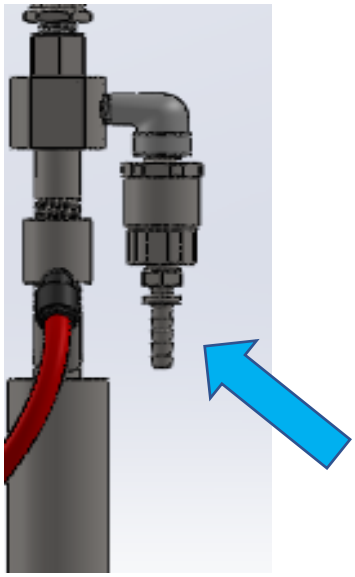

OPERATION

Plug power cord into 120VAC outlet
The timer is preset to run for 5 minutes to allow for final adjustments
Open the water supply valve
Open the air supply valve
Turn on the power switch
After the foam solution stabilizes, foam can be adjusted by using the air regulator. ▶ Wait several seconds between adjustments for the system to stabilize

TROUBLESHOOTING GUIDE

Problem	Solution
Foamer will not draw chemical	▶ Air pressure too high ▶ Chemical tube not submerged in chemical ▶ Kink in the chemical tube ▶ Nozzle size too small ▶ Water pressure too low ▶ No water supply
Foamer surges	▶ Air pressure too high or low ▶ Use of an oiler in the air line can affect quality of foam ▶ Not enough chemical ▶ Improper chemical ▶ Chemical tube not submersed in chemical ▶ Kink in hose ▶ Wrong nozzle size ▶ No water supply
Foam too wet	▶ Air pressure too low ▶ Use of an oiler in the air line can affect quality of foam ▶ Not enough chemical ▶ Improper chemical ▶ Chemical tube not submerged in chemical ▶ Kink in hose
Foam too dry	▶ Air pressure too high ▶ No metering tip ▶ Too much chemical dispensed (install smaller metering tip)
Unit does not power on	▶ Timer not set up properly or malfunction ▶ May have electrical problem, check outlet and breakers
Unit runs continuously	▶ Timer not set up properly or malfunction
Unit comes on but no water through solenoid	▶ No water to the unit ▶ Check inlet water filter
Air/solution backing up into water line	▶ Air pressure too high ▶ Foam hose kinked ▶ Plumbing too long or wrong size

WIRING DIAGRAM

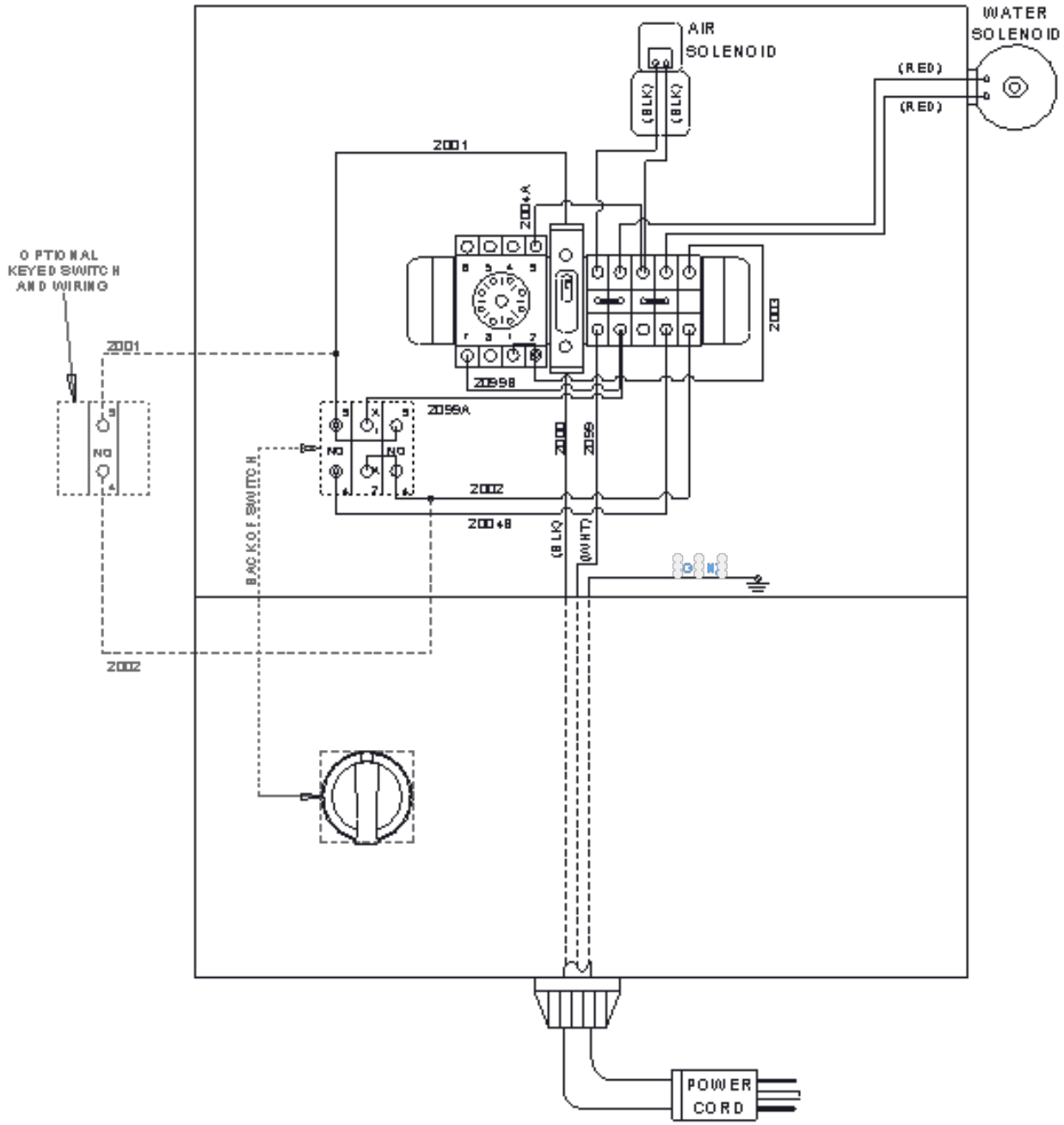

DIMENSIONS

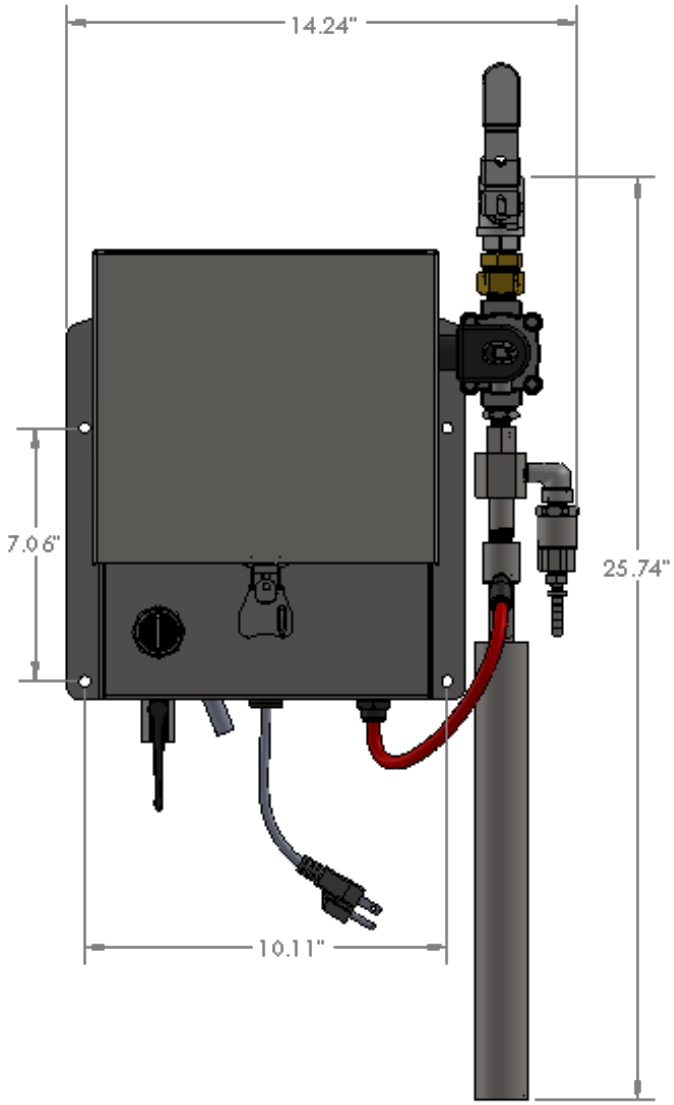

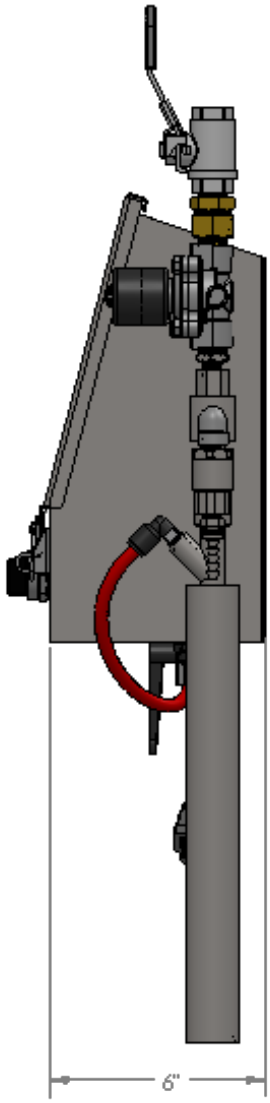

REPLACEABLE PARTS

ITEM NO.	PART #'S	DESCRIPTION	QTY.
1	PLUMBING	SEE PAGE 10	1
2	ELECTRICAL	SEE PAGE 5&11	1
3	93020	PF WALL CPLG 3/8" X 3/8" TUBE	1
4	94003	SWITCH SELECTOR 3 POS 22MM	1
5	96056	V BALL BRASS ¼" MAL FEM LEVER	1
6	96793	SS CPLG ¼"	1
7	93002	PF 3/8" TUBE X ¼" NPT	1
8	96817	SS LATCH PADLOCKABLE ¾"	1
9	92524	TUBING POLY FLOW RED ½"	0.6
10	94052	POWER CORD GRIP	1
11	94051	POWER CORD 9FT	1

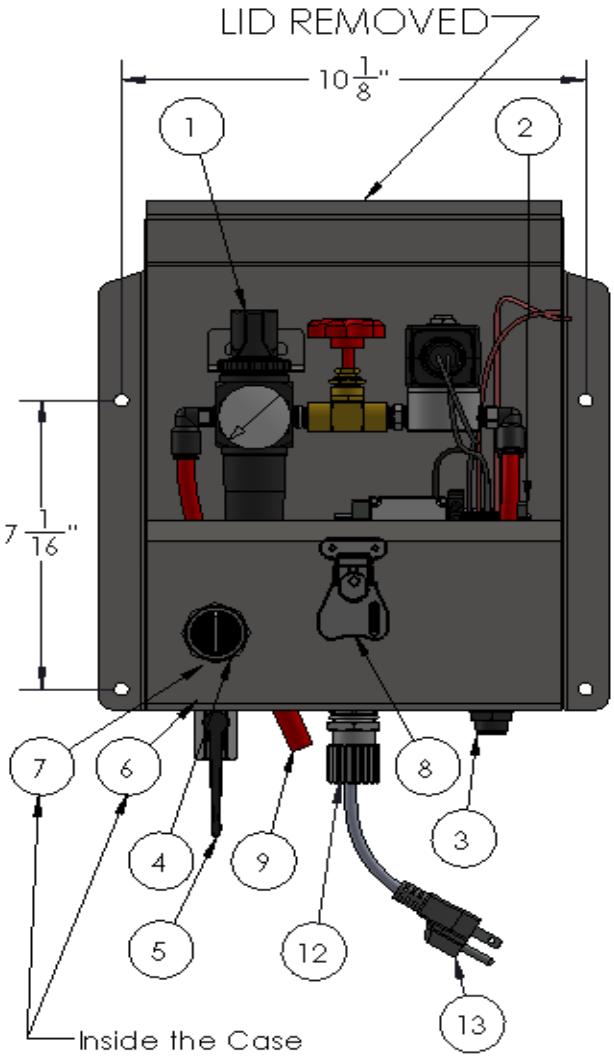

Foaming Operation

ITEM NO.	PART #'s	DESCRIPTION	QTY.
1	96006	SS EDUCTOR HIGH PRESSURE	1
2	96855	SS ST ELBOW ¼"	1
3	91053	KIT SS MIXING TUBE	1
4	93013	PF 90 3/8" TUBE X 1/4" MPT	1
5	96899	SS NIPPLE ¼" X CL	1
6	96804	SS HEX BUSH ½" X ¼"	1
7	94070	SS SOLENOID 110V ½"	1
8	96792	SS CPLG 3/8"	1
9	96894	CHK VLV SS DETERGENT ¼"	1
10	96756	SS SUCTION STUP	1
11	96053	BRASS GRD HS CPLG ¾"F X ½"M	1
12	96052	BRASS GRD HS CPLG ½"M X ¾"F	1
13	96774	SS BALL VLV ½" NON LOCKING	1

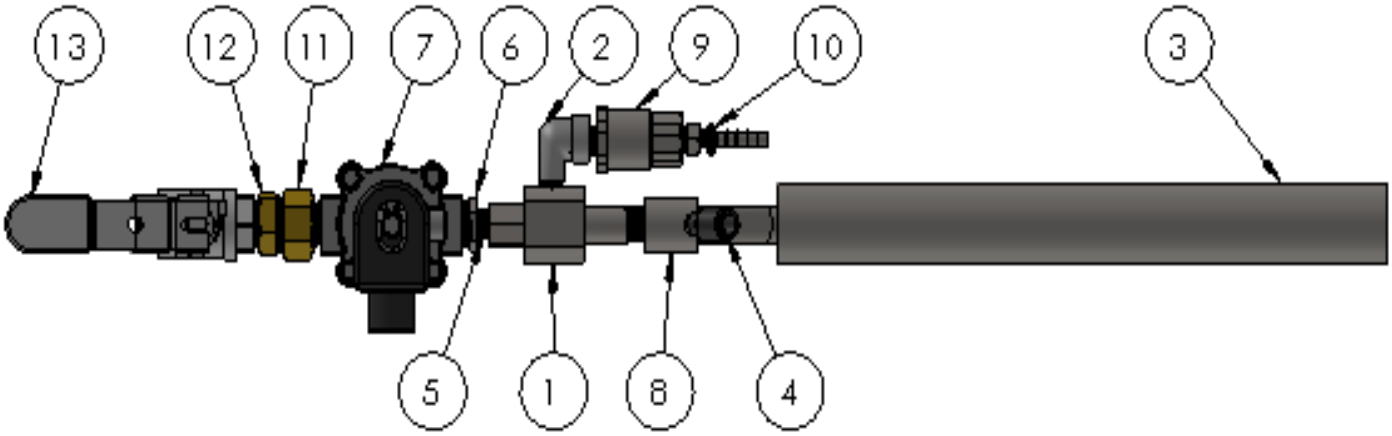

Replaceable Parts (continued)

ITEM NO.	PART #'s	DESCRIPTION	QTY.
1	96054	BRASS NEEDLE VLV ¼"	1
2	96785	CHK VLV SS ¼" MM EPDM	1
3	96899	SS NIPPLE ¼" X CL	1
4	94068	SS SOLENOID 120V ¼"	1
5	94042	NORGREN AIR REG VLV ¼"	1
6	93013	PF 90 3/8" TUBE X 1/4" MPT	2
7	91018	KIT NORGREN BRACKET	1

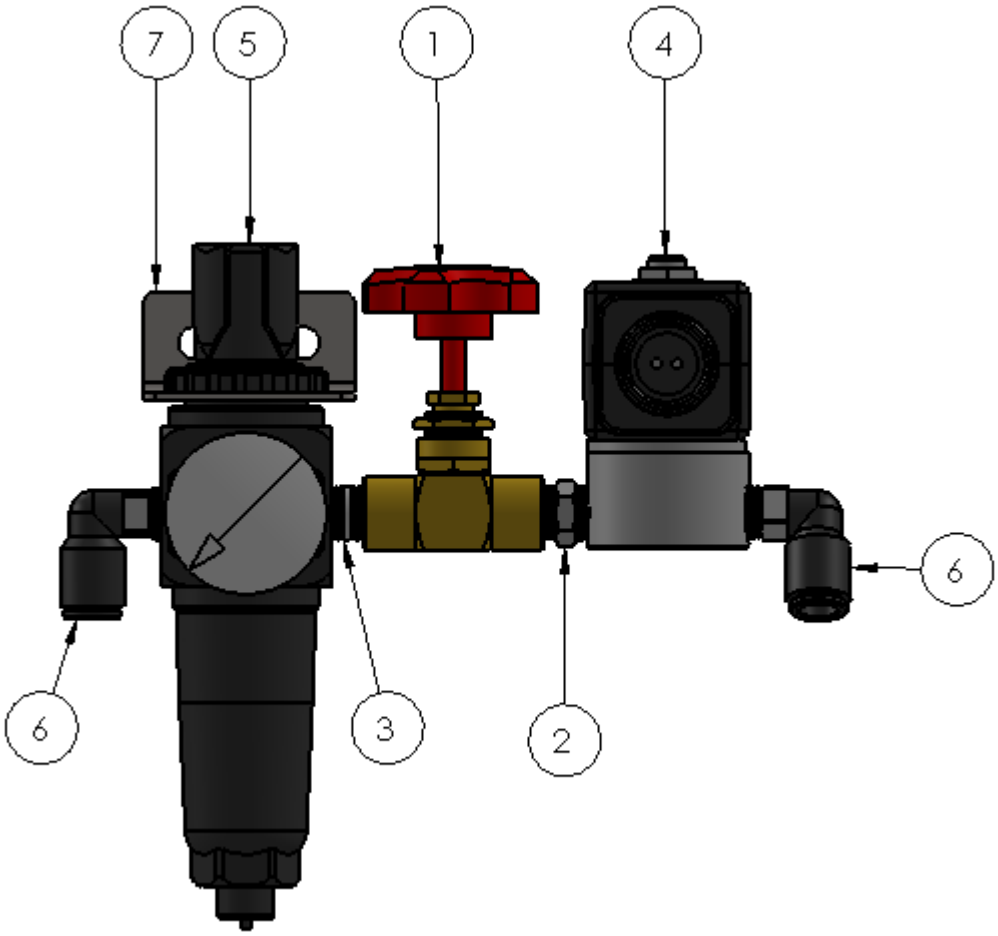

Replaceable Parts (continued)
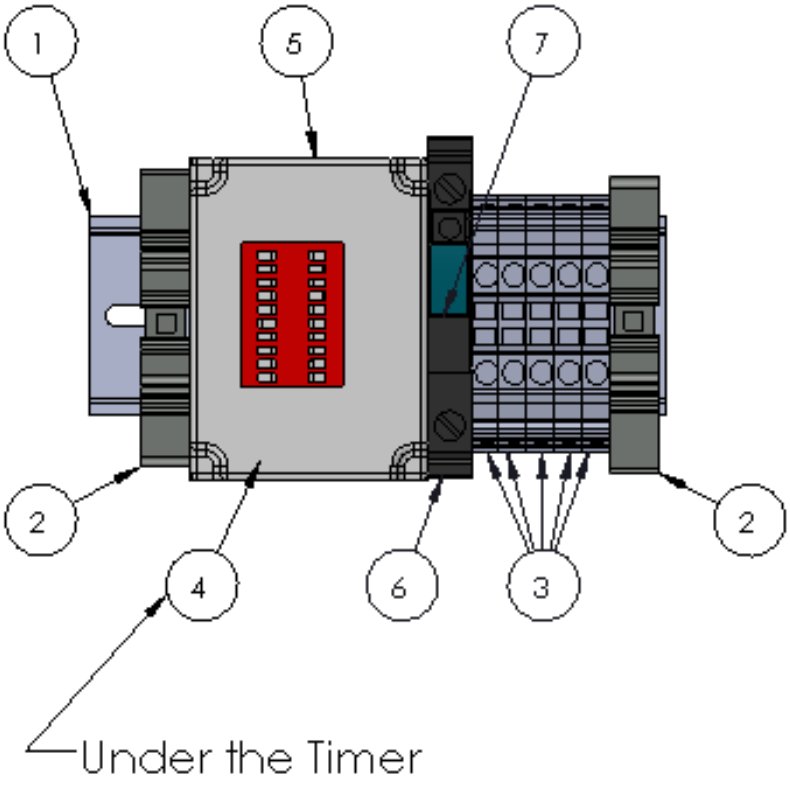
ITEM NO.	PART #'s	DESCRIPTION	QTY.
1	95505	DIN RAIL	1
2	94027	END ANCHORS	2
3	94082	TERM BLK GRAY 26-12 AWG	5
4	94006	RELAY BASE 8 PIN	1
5	94002	TIMER REPEAT (1 TO 1023 SEC)	1
6	94030	FUSE TYPE TERMINAL BLOCK	1
7	94040	MINI BREAKER 1 AMP	1